Academic

Grade 9 Assessment of Mathematics

2012

RELEASED ASSESSMENT QUESTIONS

Record your answers to the multiple-choice questions on the Student Answer Sheet (2012, Academic).

Education Quality and Accountability Office
EQAO

Please note: The format of this booklet is different from that used for the assessment. The questions themselves remain the same.

Directions

Make sure you have the following materials:

- Student Answer Sheet
- the Formula Sheet
- a pencil and an eraser
- a ruler
- a scientific or graphing calculator
- some paper for rough work for multiple-choice questions only

The diagrams in this booklet are **not** all drawn to scale.

Answering Multiple-Choice Questions

When answering the multiple-choice questions, be sure you use Student Answer Sheet. The circles you will be filling in are lettered a, b, c, d.

1. Try to answer all of the multiple-choice questions. Be sure to read each question and its four answer choices carefully. Do not spend too much time on any one question.
2. To indicate your answer, **use a pencil to fill in the circle completely** on Student Answer Sheet.
   Like this: ● Not like this: ⊗ ✓ ◒ ◉
3. If you fill in more than one answer to a question, the question will be scored zero.
4. If you leave a question blank, the question will be scored zero.
5. Cleanly erase any answer you wish to change and fill in the circle for your new answer.

Answering Open-Response Questions

1. Do all of your work (even your rough work) in this booklet.
2. Present a complete and well-organized solution to each question. Give as much information as you can.
3. Write your solutions so that they can be understood by someone who does not know your work.
4. Make sure you follow the directions on the Key Words page.

   For example, a question might ask you to "Show your work." Read the Key Words page. It says to record all calculations and steps. So, if you sketch a graph in the process of getting to your answer, show the sketch and label it.
5. When using a calculator, write down the numbers you use and the operations you carry out.

   For example, a question might ask you to "Find the area of a circle with a radius of 7 cm." You need to write $A = \pi(7)^2$ as well as the answer you get on your calculator.

Key Words

Throughout the assessment, key words are used to identify the type of response required from you. The key words are explained below. Refer to this sheet to make sure you are responding fully to each question.

Compare:
Tell what is the same and what is different.

Describe:
Use words to create a mental picture for the reader.

Determine:
Use mathematics to find a solution to the problem.

List:
Use point form.

Explain:
Use words and symbols to make your solution clear.

Justify:
Give reasons and evidence to show your answer is correct.

Show your work:
Record all calculations and all the steps you went through to get your answer. You may use words, numbers, graphs, diagrams, symbols and/or charts.

1 What is the value of the expression x^2 when $x = \frac{4}{5}$?

a $\frac{8}{5}$

b $\frac{8}{10}$

c $\frac{16}{5}$

d $\frac{16}{25}$

2 The volume of a rectangular prism is represented by $12x^3$. The height is represented by $3x$.

Which of the following represents the area of the base?

> **Hint:**
> V = (area of base)(height)

a $4x^2$

b $4x^3$

c $9x^2$

d $9x^3$

3 A basketball player scores 28 points in a game. She scores 35% of the total team points.

How many points does her team score in total?

a 63

b 65

c 72

d 80

4 Which of the expressions below is equivalent to $3(4x - 5) - 7(9x - 2)$?

a $-51x - 1$

b $-51x - 3$

c $-51x - 7$

d $-51x - 29$

5 Liam sells sandwiches at an arena. He earns \$10.50 per hour plus \$0.40 for each sandwich he sells.

How many sandwiches does he need to sell during a 6-hour shift to earn \$125?

a 158

b 155

c 62

d 12

6 What a Bargain!

Susan buys a tennis racket from a store.

- The tennis racket's original price is $75.
- All tennis rackets are on sale for 25% off the original price.
- The tennis racket has a scratch, so she receives an additional 10% off the sale price.

How much does Susan pay for her tennis racket, including 13% tax?

Show your work.

7 Consider the graph below.

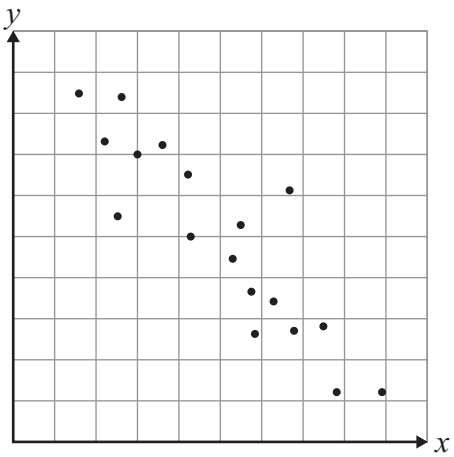

Which relationship is most likely to be represented by this graph?

a height vs. weight

b pay vs. number of hours worked

c gas remaining vs. distance travelled

d volume of water in a bucket vs. its mass

8 The figures below are made with sticks of equal length. Figure 1 is made with 4 sticks.

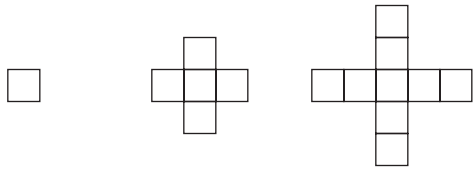

Figure 1 Figure 2 Figure 3

The pattern continues in the same way.Which table shows the relationship between the number of sticks, *S,* and the figure number, *n*?

a

n	*S*
1	4
2	20
3	36

b

n	*S*
4	40
5	52
6	64

c

n	*S*
3	12
4	16
5	20

d

n	*S*
5	17
6	21
7	25

9 Which of the following represents a non-linear relation?

a

x	y
1	1
2	4
3	9
4	16

b

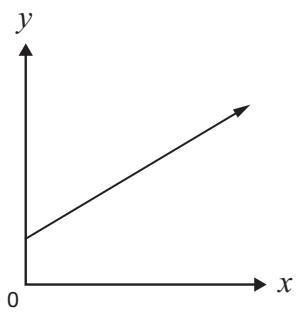

c $y = 2x + 3$

d

x	y
4	8
3	5
2	2
1	−1

10 A line of best fit is drawn on the scatter plot below.

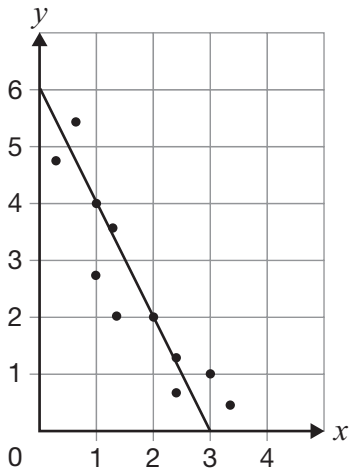

The slope of the line is -2.

Which equation represents the line?

a $y = 6x - 2$

b $y = 3x - 2$

c $y = -2x + 3$

d $y = -2x + 6$

11 Bruno leaves home and goes for a run along a straight path. He runs to the park, stops for a rest and returns home.

Which graph best represents his run?

a

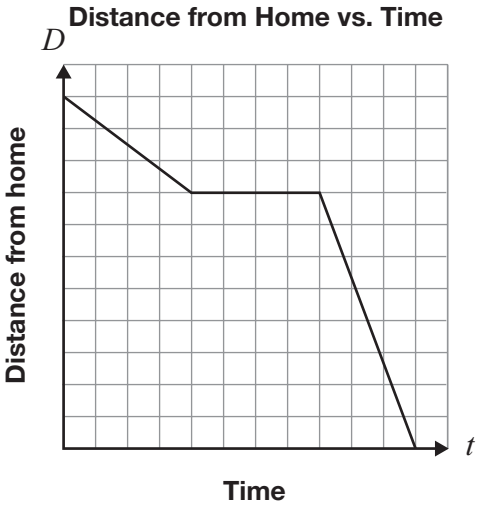

b

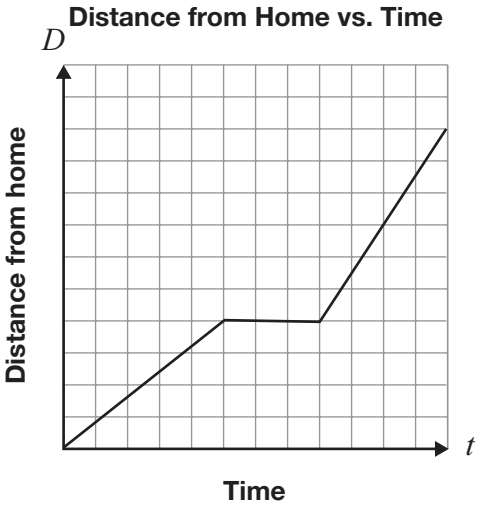

c

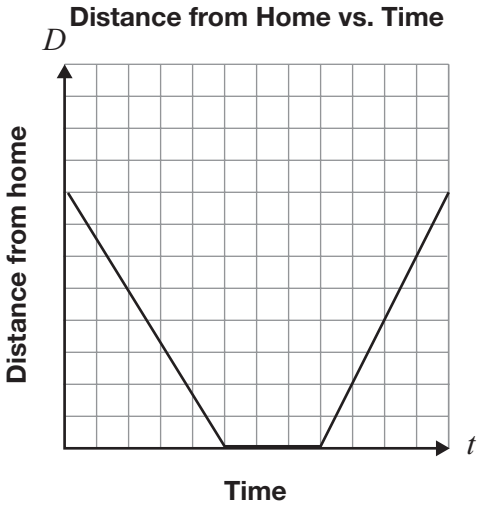

d

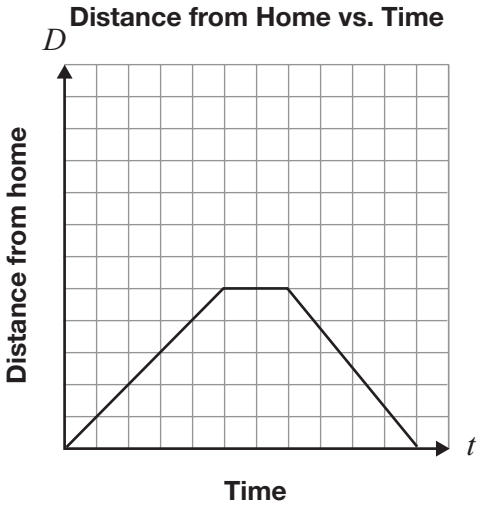

12 Abigail buys a prepaid card for her cellphone. When she talks on her phone, a fee per minute is deducted from the value of the prepaid card.

The table below shows information about the remaining value of the card.

Total number of minutes used, t	Remaining value, V ($)
10	22.00
20	19.00

Which equation represents the relationship between the remaining value and total number of minutes used?

a $V = 22 - 3t$

b $V = 22 - 0.30t$

c $V = 25 - 3t$

d $V = 25 - 0.30t$

13 Which Is Which?

A relationship between the total cost to use a gym for a month, C, and the number of visits, n, is a partial variation. The total cost for 10 visits during one month is $50.

Draw a graph that could represent this relationship. Label each axis with an appropriate scale.

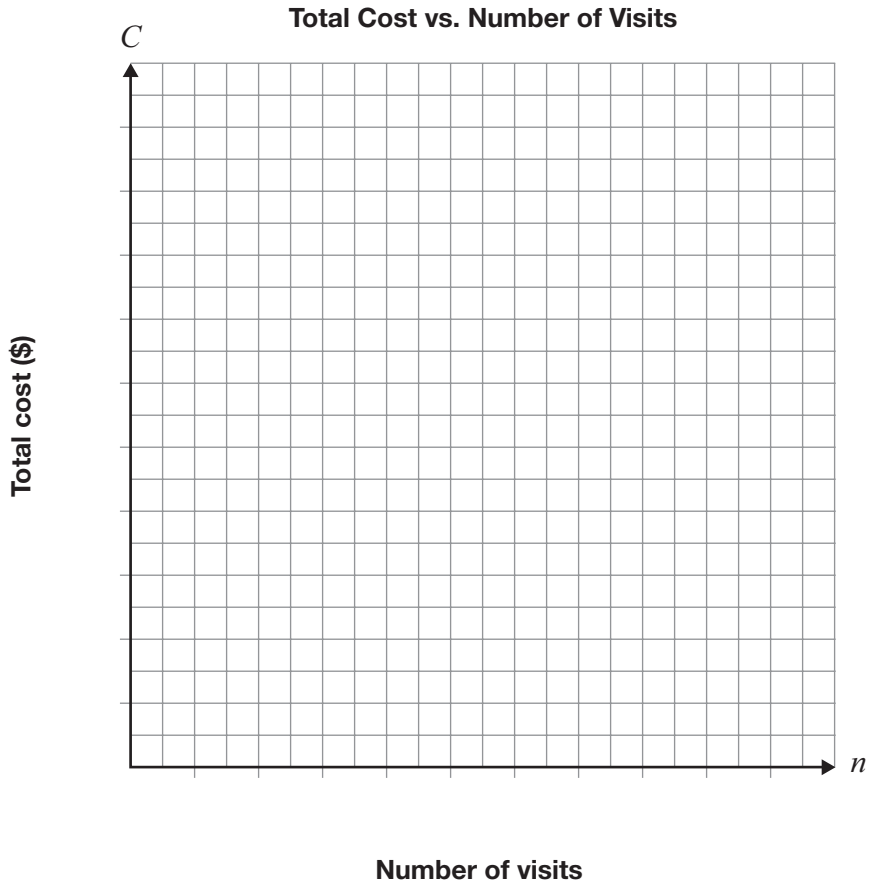

Determine the equation for your graph.

$C =$ _____

Explain how you know your equation represents a partial variation.

14 Counting Pennies

Identical pennies are placed in a container and the total mass is recorded.

The table below gives information about the total mass of different numbers of pennies in the container.

Number of pennies	Total mass (g)
4	60
6	65
10	75

Use the data to determine the number of pennies in the container when the total mass is 185 g.

Justify your answer. You may use the grid if you wish.

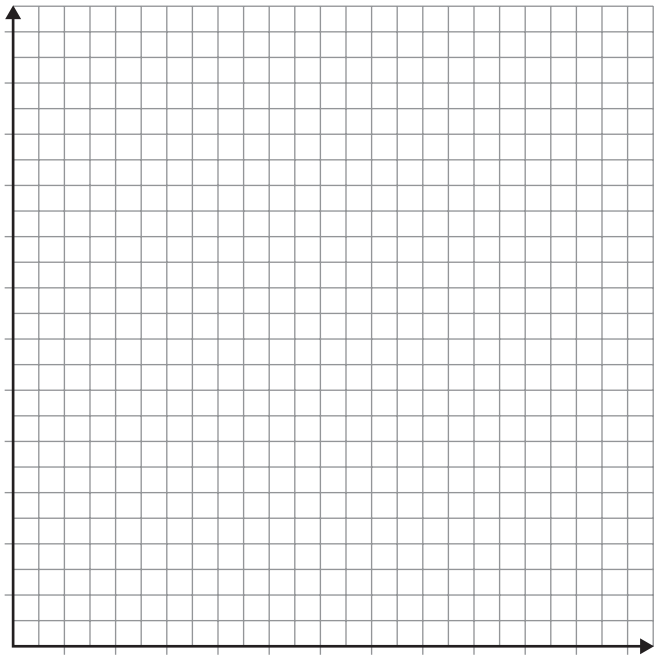

15 Which of the following equations does **not** represent a line?

a $x = 5$

b $y = 10$

c $xy = 10$

d $5x - y + 10 = 0$

16 Which of the following is the equation $4x - 5y + 12 = 0$ in the form $y = mx + b$?

a $y = \frac{4}{5}x + \frac{12}{5}$

b $y = \frac{5}{4}x - 3$

c $y = 4x - 7$

d $y = 5x + 16$

17 Consider the equation $y = mx + 5$.

If (7, 3) is a point on the line represented by this equation, which of the following is true?

a The rise is 8 when the run is 7.

b The rise is 7 when the run is 8.

c The rise is -2 when the run is 7.

d The rise is 7 when the run is -2.

18 Consider the relation $y = -3x + 5$.

Which of the following statements about the graph of this relation is **not** true?

a The slope is 3.

b The y-intercept is 5.

c For a rise of 3, the run is -1.

d The graph crosses the y-axis at (0,5).

19 The total cost of swimming at a community swimming pool is made up of a membership fee and a cost per swim.

At this community centre, Jake pays a total of \$100 and swims 40 times. Paula pays a total of \$70 and swims 25 times.

Which of the following statements is true?

a The membership fee is \$20.

b The membership fee is \$30.

c The cost per swim is \$2.50.

d The cost per swim is \$2.80.

20 A local fair charges a \$15 entry fee and \$1.75 per ride. Dustin has \$35 to spend.

What is the maximum number of rides Dustin can go on?

a 8

b 11

c 12

d 20

21 In the relation $C = 60 + 15n$, C represents the total cost of holding an event at a hall, and n represents the number of guests.

The maximum number of guests allowed in the hall is 100.

What are the minimum and maximum possible values for C?

a \$0, \$1500

b \$0, \$1560

c \$60, \$1500

d \$60, \$1560

22 Know Your Lines

Consider the equations of the two lines below.

Line A: $y = -\frac{3}{2}x - 7$

Line B: $y = \frac{2}{3}x - 4$

Compare Line A and Line B. You may use the grid if you wish.

Justify your answers.

Complete the table below.

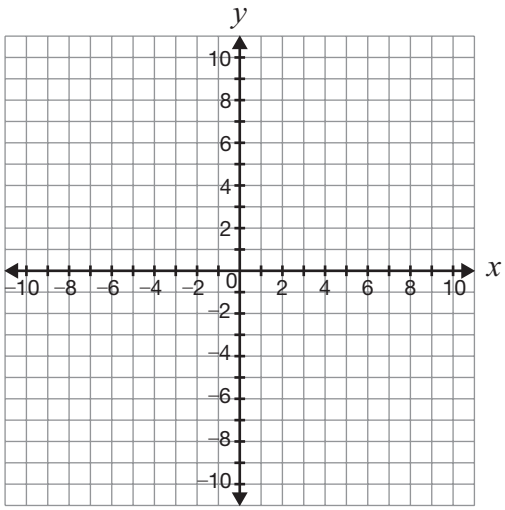

Characteristic	Comparison of Line A and Line B, with justification
Direction from left to right	
Steepness	
Parallel, perpendicular or neither	

23 Reduce, Reuse and Recycle

A high school is starting a recycling program.

The relationship between the total cost of the program, C, and the number of recycling bins, n, is represented by the equation $C = 48n + 75$.

The school must install a minimum of 12 recycling bins and has a maximum of $1000 to spend on the program.

What are the possible values of C and n in this situation?

Justify your answer.

The possible values of n are _____.

The possible values of C are _____.

24 Each of the diagrams below shows a right triangle and a square constructed on each of its sides.

According to the Pythagorean theorem, which diagram is **not** correct?

a

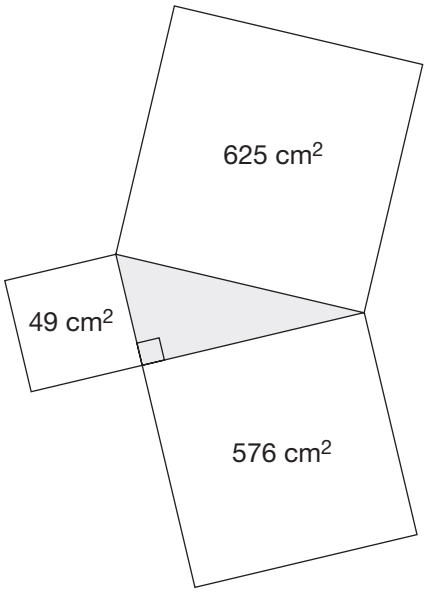

b

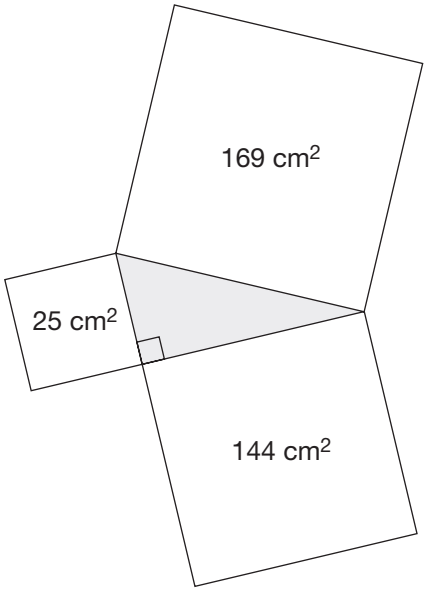

c

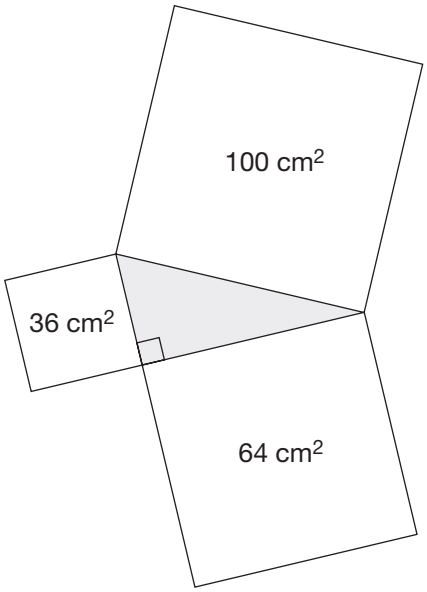

d

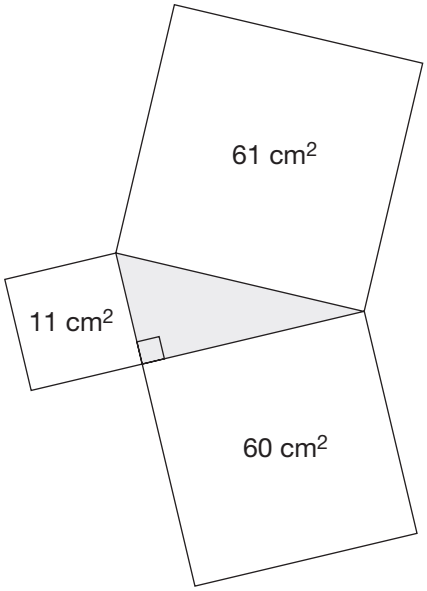

25 A pylon in the shape of a cone is shown below.

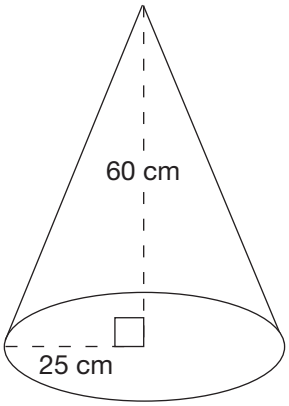

The outside surface of the cone is to be painted, but the bottom will not be painted.

Which of the following is closest to the total surface area to be painted?

a 4284 cm^2

b 4713 cm^2

c 5105 cm^2

d 5350 cm^2

26 A decoration is packed in a box shaped like a cube as shown below.

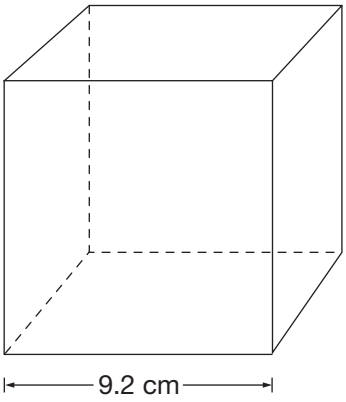

The decoration has a volume of 651 cm^3.

Approximately how much empty space remains in the box?

a 128 cm^3

b 143 cm^3

c 623 cm^3

d 779 cm^3

27 Two different cylindrical containers are shown below.

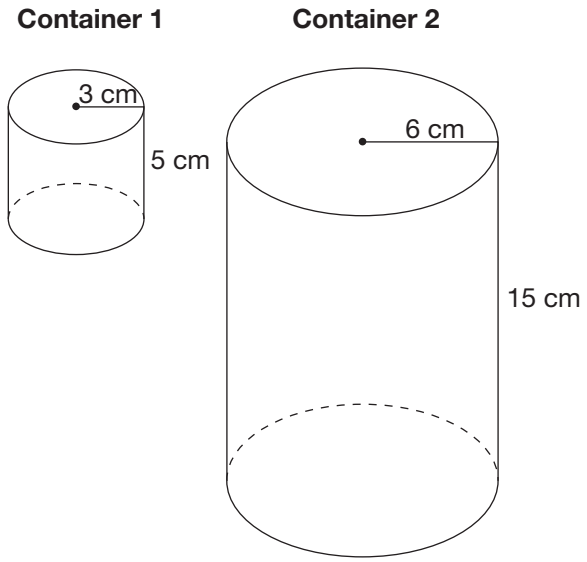

When the containers are full of milk, what is the ratio of the amount in Container 1 to the amount in Container 2?

a 1:2

b 1:3

c 1:6

d 1:12

28 Consider the diagram below.

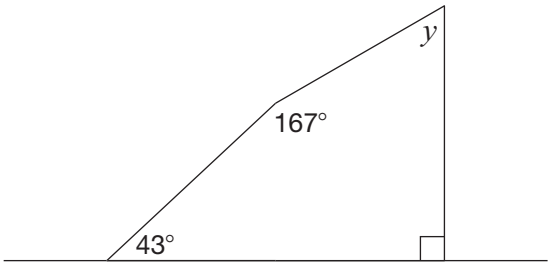

What is the value of y?

a 43°

b 60°

c 137°

d 150°

29 Consider the right triangle below.

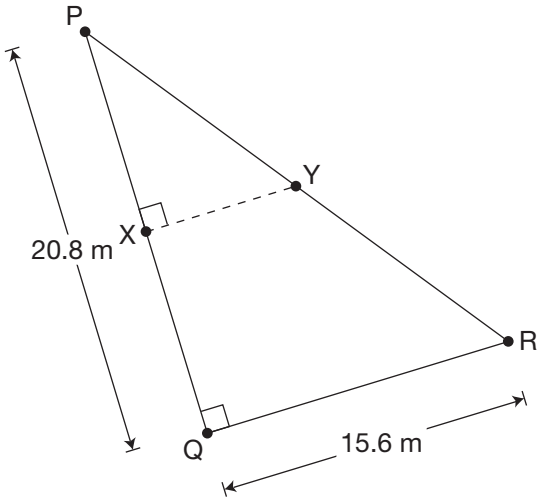

Line segment XY connects the midpoint of PQ to the midpoint of PR.

What is the length of XY?

a 5.2 m

b 7.8 m

c 10.4 m

d 13.0 m

30 All the Right Stuff

The diagram below shows a small right triangle inside a large right triangle.

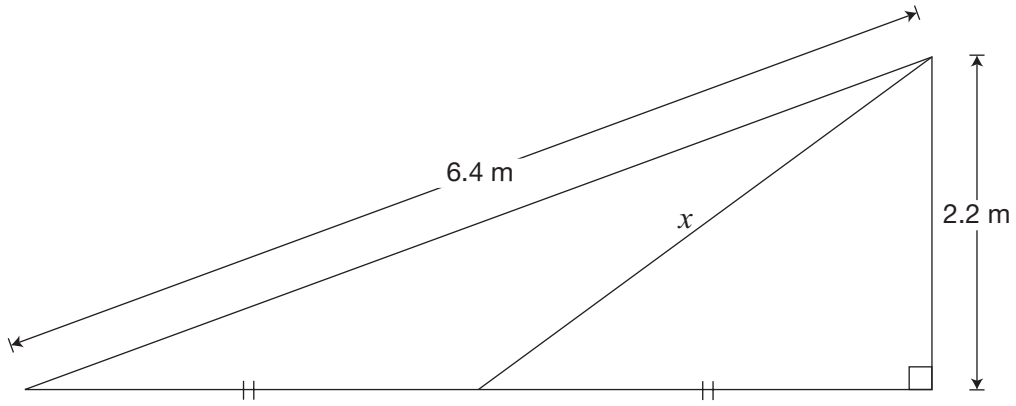

Determine the value of x.

Show your work.

31 Tricky Triangle

Line segment AB joins the midpoints of two sides of the triangle below. The length of AB is half the length of the base of the triangle.

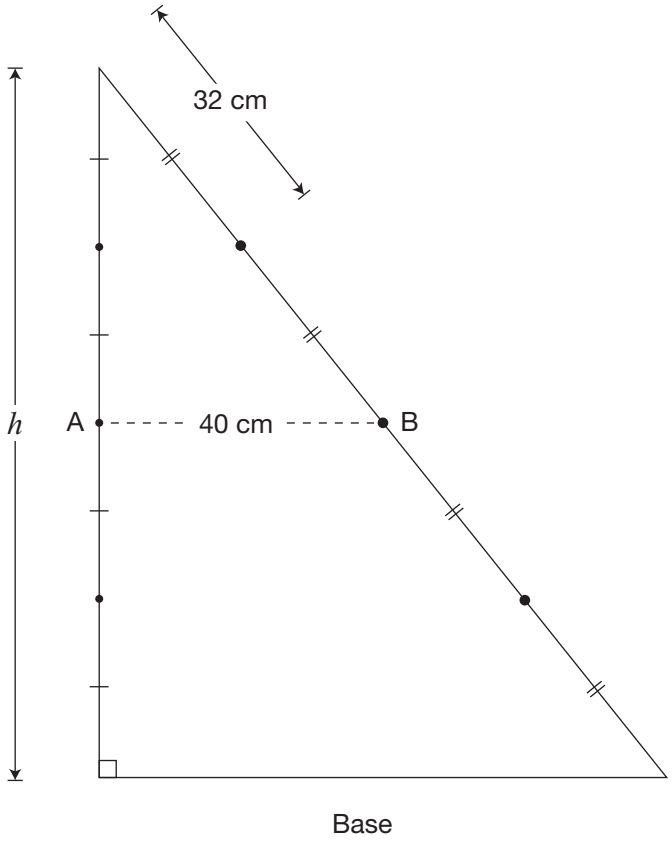

Determine the value of h in the diagram.

Show your work.

Education Quality and Accountability Office
EQAO

2 Carlton Street, Suite 1200, Toronto, ON M5B 2M9
Telephone: 1-888-327-7377 Web site: www.eqao.com.
© 2012 Queen's Printer for Ontario.